TECHNICAL DATA

Motor

Motor type:		6-cylinder, water-cooled, turbocharged 4-stroke diesel, CUMMINS 6BT 5.9 Elite.
Power:		110 kW (148 hp) at 2200 rpm.
Stroke volume:		5.9 litre.

Power transmission

Type:		Hydrostatic (Linde) with variable pump and motor, both of axial piston type.
Speed:	Motor class 1	Low gear: 0-10 km/h. High gear: 0-40 km/h.
	Motor class 2	Low gear: 0-8.5 km/h. High gear: 0-30 km/h.
Axles:		Conical angular gears with automatic disk-type differential blocks.
Gearbox:		2 gears: high/low, shiftable under operation.

Tyres

Standard equipment:	520/70x34 front and rear
Alternative equipment:	18.4x30 front and rear
	18.4x34 front and rear
	600/65x34 front and rear
	620/60x34 front and rear

Brakes

Service brake:	Wet disk brakes on all four wheels, controlled by a proportional hydraulic servo system. Alarm on terminal and buzzer together with limitation to low gear, if the brake pressure becomes too low.
Digging brake:	Service brake is automatically fully applied when motor rpm falls below traction rpm (This automatic feature can be disabled).
Parking- and emergency brake:	El operated disk brake in gearbox, released by hydraulics. (Driving is electrically blocked when this brake is applied.)

Steering

Steering wheel:	Hydrostatic articulated steering, proportionally controlled from the steering wheel.
Joystick steering:	Joystick steering, for moving when digging or loading (double command)
	From 10-20 km/h, max. steering speed decreases with increased vehicle speed.

NOTE! Terrain (joystick) steering must not to be applied when driving on public roads. Max. speed is limited to approx. 20 km/h when terrain steering is activated.

Working hydraulics

System type:	Load sensing (LS).
Pumps:	2 variable axial piston pumps. 60 + 100 cc. (Rexroth)
Max. working pressure:	23 MPa (233 bar).
Pump 1 (left pump):	Functions: • Wheel steering and brakes via priority block. • Digging unit. • Joystick control, double command. • Hydraulic motor outlet. • Loading unit.
Pump 2 (right pump):	Functions: • Loading unit. • Digging unit. • Joystick control, double command. • Hydraulic motor outlet. • The pump is equipped with power limitation.
Rated max. flow at 2000 rpm. Rated max. flow at 1500 rpm. Rated max. flow at 1000 rpm.	320 l/min. 239 l/min. 160 l/min.

Electric system

System voltage:	24 Volt.
Generator:	A.C. 55 A
Battery:	2 batteries 12V, 105 Ah, connected in series.

MEASUREMENTS AND WEIGHT

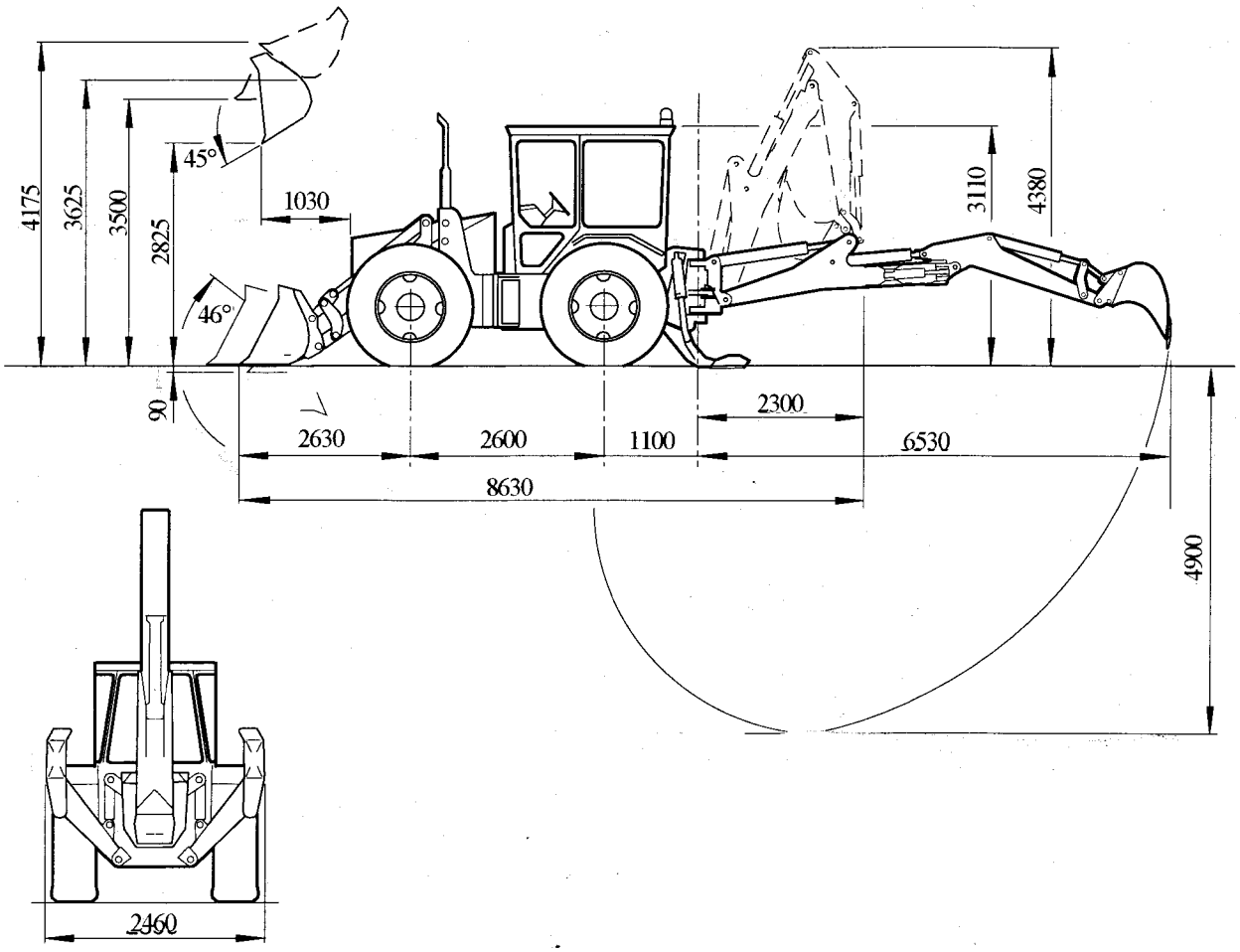

MEASUREMENTS AND WEIGHT

With tyre equipment :	520x34	18.4x30	18.4x34	600x34
Weight:		11500 kg.		
Transport width with tyres, excluding front bucket:	2470 mm.	2390 mm.	2390 mm.	2600 mm.
Turning radius at bucket outside, bucket width 2,4 m:	6.3 m.	6.4 m.	6.4 m.	6.4 m.
Turning radius outer wheel:	5.8 m.	6.2 m.	6.2 m	6.3 m.
Turning radius inner wheel:	3.5 m.	3.6 m.	3.5 m.	3.5 m.
Volume fuel tank:	125 l.			
Volume, working hydraulics:	Tank 185 l. Total 340 l.			
Volume transmission hydraulics:	Tank 17 l. Total 26 l.			